NEIL SCOPE 3

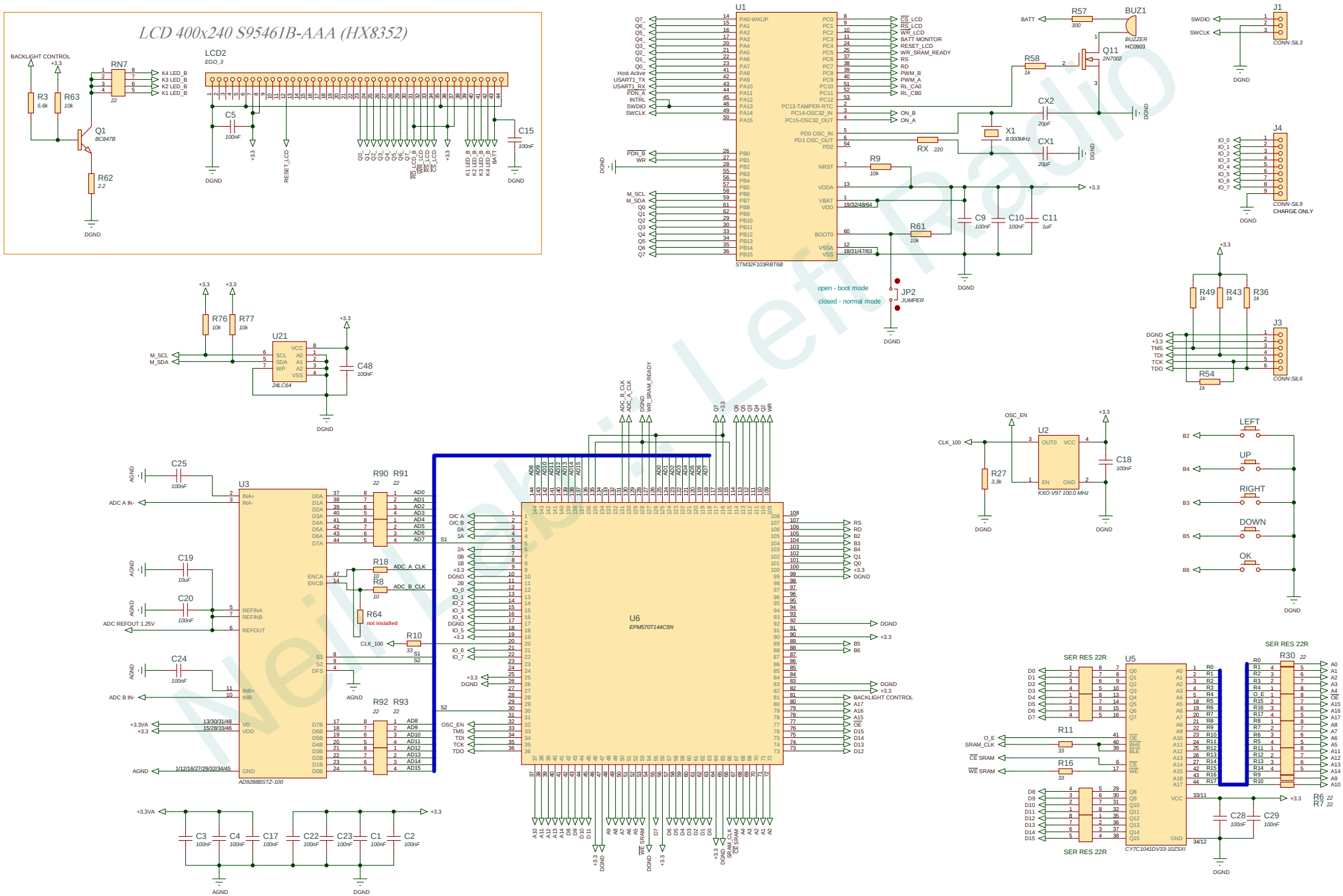

Neil Poole Left Radio

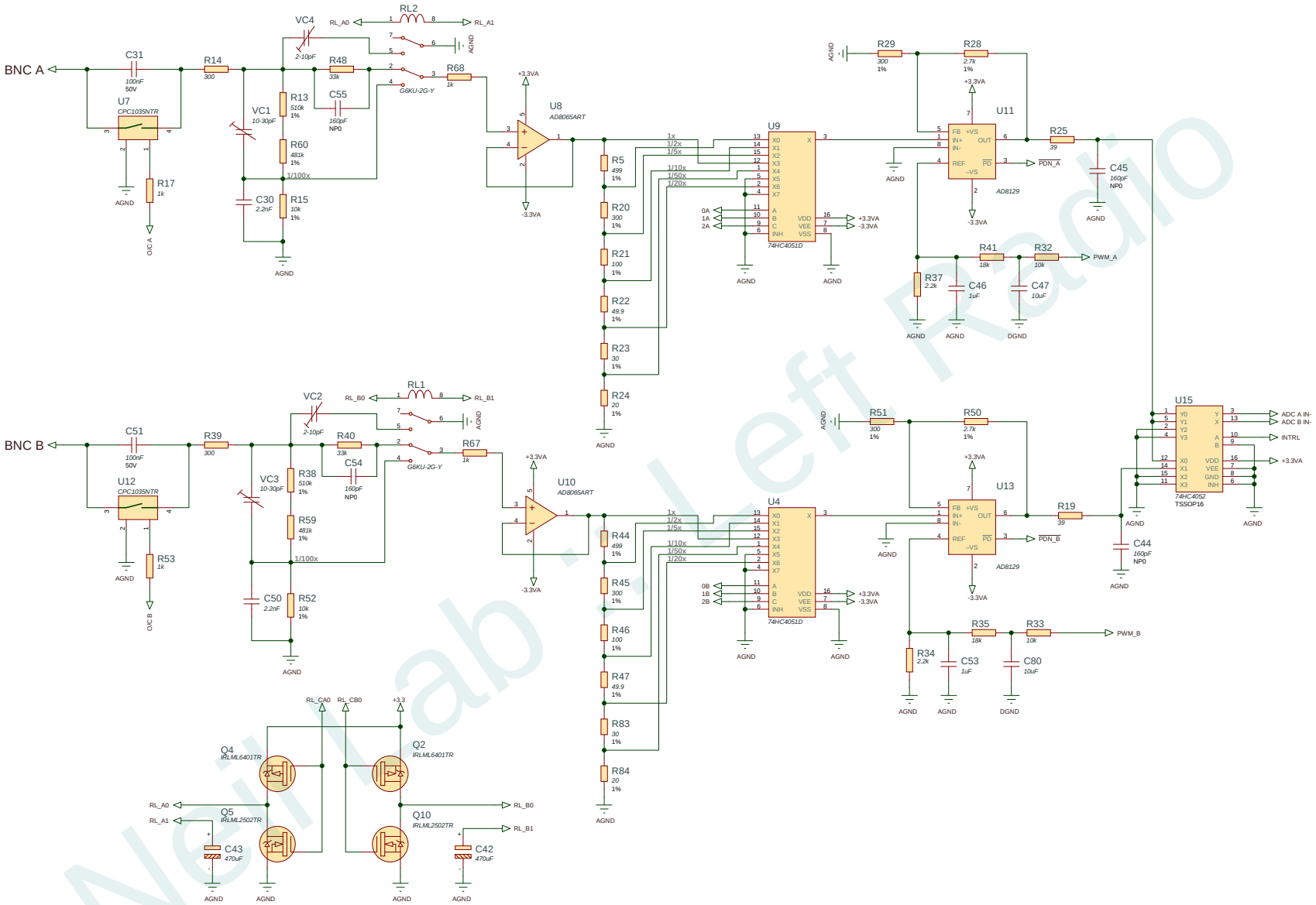

Neil Lab . Left Radio

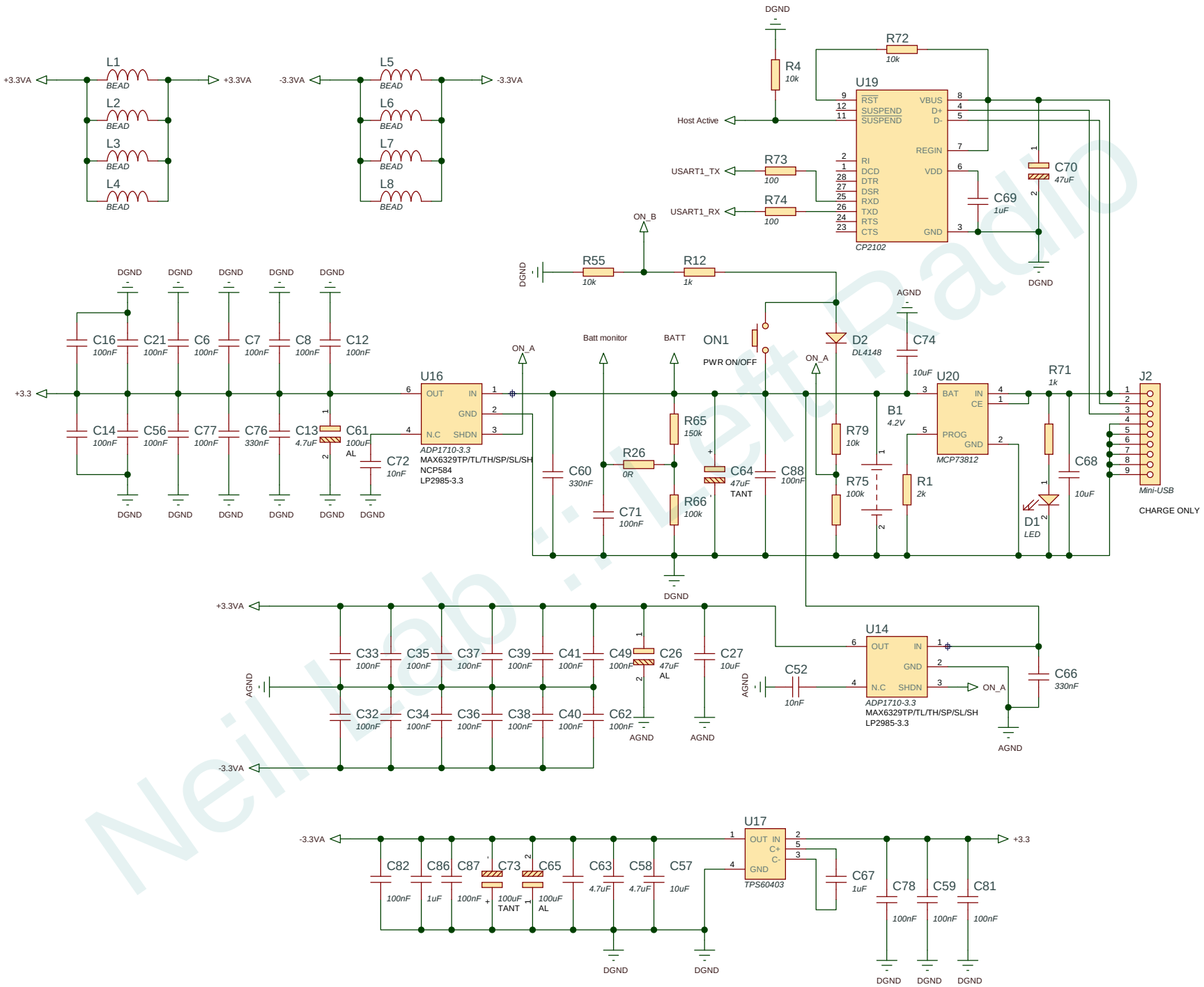

Neil Lab .. Left Radio