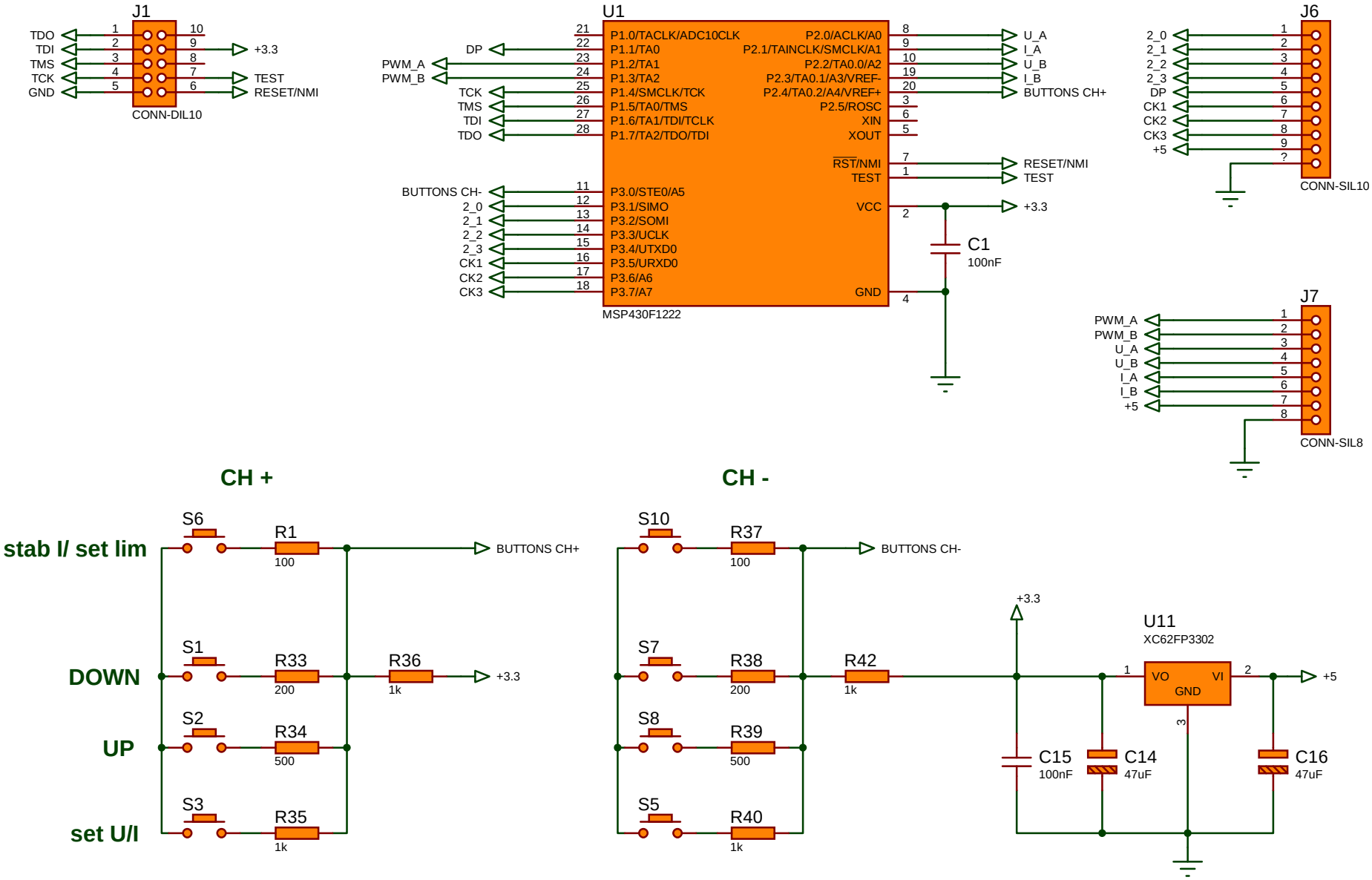
J1
TDO
TDI
TMS
TCK
GND
+3.3
TEST
RESET/NMI
CONN-DIL10
U1
P1.0/TACLK/ADC10CLK
P1.1/TA0
P1.2/TA1
P1.3/TA2
P1.4/SMCLK/TCK
P1.5/TA0/TMS
P1.6/TA1/TDI/TCLK
P1.7/TA2/TDO/TDI
P3.0/STE0/A5
P3.1/SIMO
P3.2/SOMI
P3.3/UCLK
P3.4/UTXD0
P3.5/URXD0
P3.6/A6
P3.7/A7
P2.0/ACLK/A0
P2.1/TAINCLK/SMCLK/A1
P2.2/TA0.0/A2
P2.3/TA0.1/A3/VREF-
P2.4/TA0.2/A4/VREF+
P2.5/ROSC
XIN
XOUT
RST/NMI
TEST
VCC
GND
MSP430F1222
DP
PWM_A
PWM_B
TCK
TMS
TDI
TDO
BUTTONS CH-
2_0
2_1
2_2
2_3
CK1
CK2
CK3
U_A
I_A
U_B
I_B
BUTTONS CH+
RESET/NMI
TEST
+3.3
C1
100nF
J6
2_0
2_1
2_2
2_3
DP
CK1
CK2
CK3
+5
CONN-SIL10
J7
PWM_A
PWM_B
U_A
U_B
I_A
I_B
+5
CONN-SIL8
CH +
stab I/ set lim
DOWN
UP
set U/I
S6
S1
S2
S3
R1
100
R33
200
R34
500
R35
1k
R36
1k
BUTTONS CH+
+3.3
CH -
S10
S7
S8
S5
R37
100
R38
200
R39
500
R40
1k
R42
1k
BUTTONS CH-
+3.3
U11
XC62FP3302
VO
VI
GND
+5
C15
100nF
C14
47uF
C16
47uF

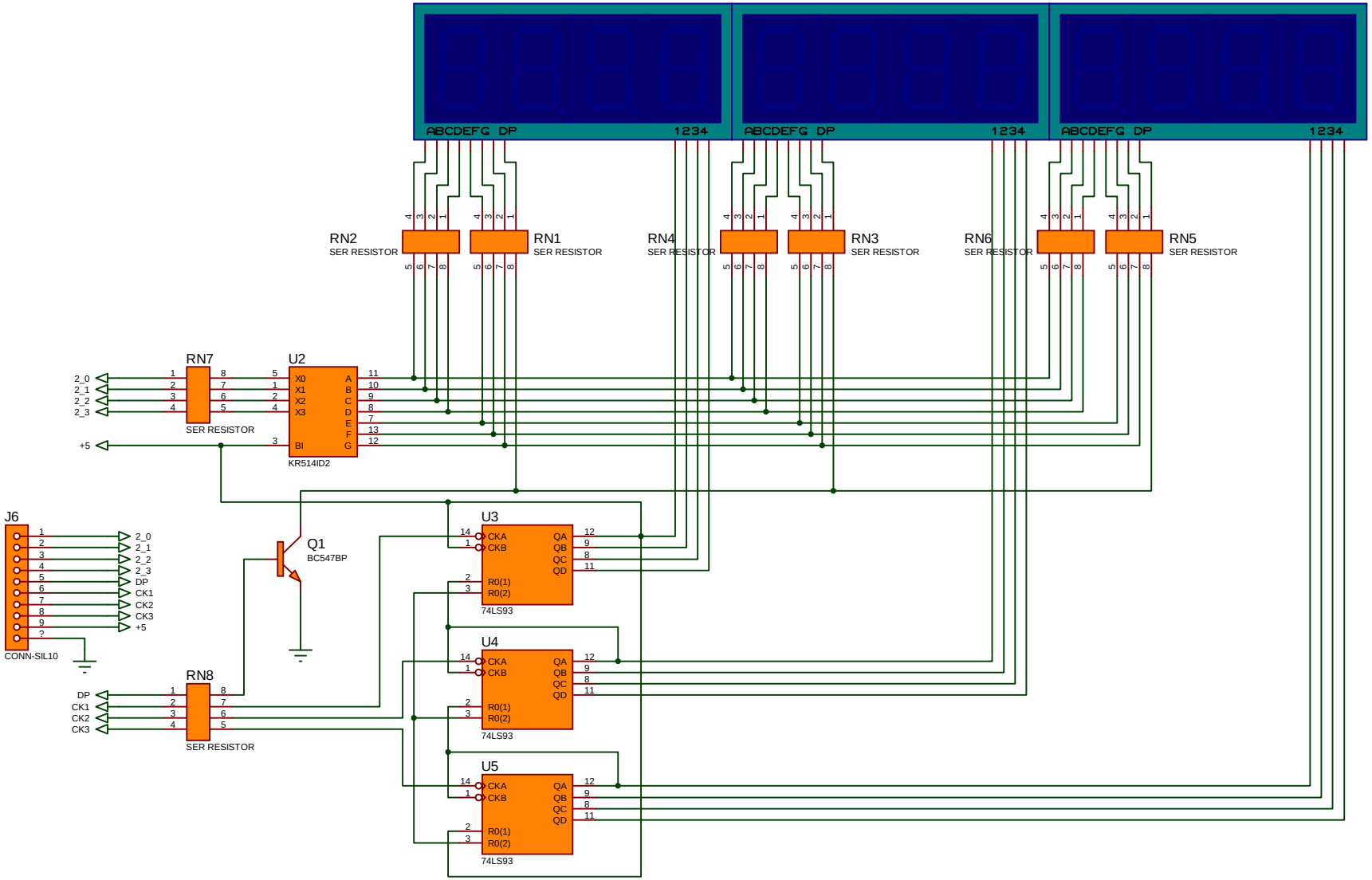
ABCDEFG DP
1234
RN2
SER RESISTOR
RN1
SER RESISTOR
RN4
SER RESISTOR
RN3
SER RESISTOR
RN6
SER RESISTOR
RN5
SER RESISTOR
RN7
SER RESISTOR
U2
KR514ID2
2_0
2_1
2_2
2_3
+5
J6
CONN-SIL10
DP
CK1
CK2
CK3
Q1
BC547BP
RN8
SER RESISTOR
U3
U4
U5
74LS93
CKA
CKB
QA
QB
QC
QD
R0(1)
R0(2)

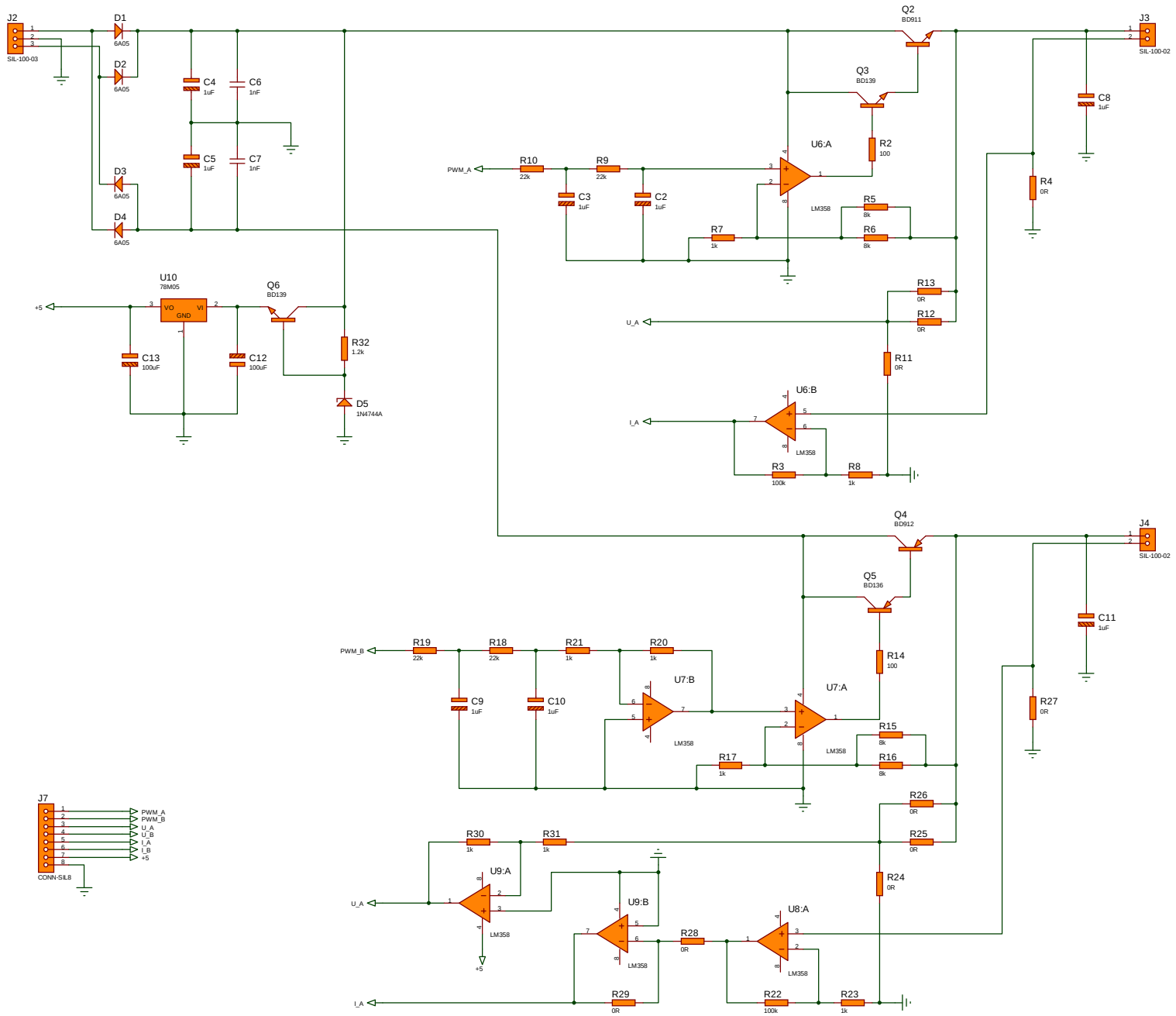
J2
SIL-100-03
D1
6A05
D2
6A05
D3
6A05
D4
6A05
C4
1uF
C6
1nF
C5
1uF
C7
1nF
U10
78M05
VO
GND
VI
+5
C13
100uF
C12
100uF
Q6
BD139
R32
1.2k
D5
1N4744A
Q2
BD911
Q3
BD139
J3
SIL-100-02
C8
1uF
R4
0R
U6:A
R2
100
PWM_A
R10
22k
R9
22k
C3
1uF
C2
1uF
LM358
R5
8k
R6
8k
R7
1k
R13
0R
R12
0R
U_A
R11
0R
U6:B
I_A
LM358
R3
100k
R8
1k
Q4
BD912
J4
SIL-100-02
Q5
BD136
C11
1uF
R14
100
PWM_B
R19
22k
R18
22k
R21
1k
R20
1k
U7:B
U7:A
C9
1uF
C10
1uF
LM358
R15
8k
R16
8k
R17
1k
R27
0R
R26
0R
R25
0R
R24
0R
J7
CONN-SIL8
PWM_A
PWM_B
U_A
U_B
I_A
I_B
+5
R30
1k
R31
1k
U9:A
U9:B
U8:A
R28
0R
R29
0R
R22
100k
R23
1k