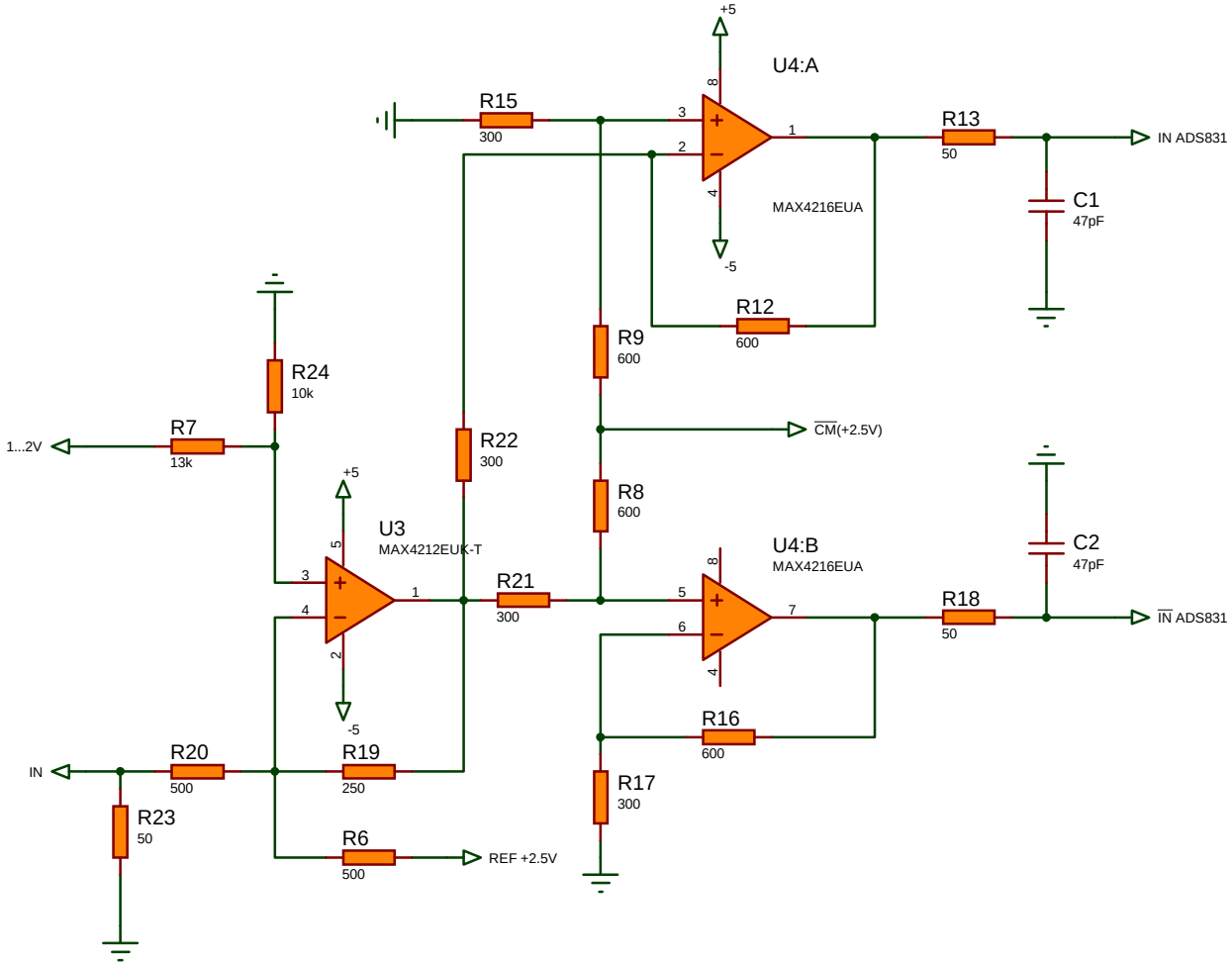
+5
U4:A
R15
300
3
2
8
4
1
MAX4216EUA
-5
R13
50
IN ADS831
C1
47pF
R12
600
R9
600
R24
10k
R7
13k
1...2V
R22
300
CM(+2.5V)
+5
U3
MAX4212EUK-T
R8
600
U4:B
MAX4216EUA
C2
47pF
R21
300
R18
50
IN ADS831
-5
R16
600
IN
R20
500
R19
250
R17
300
R23
50
R6
500
REF +2.5V