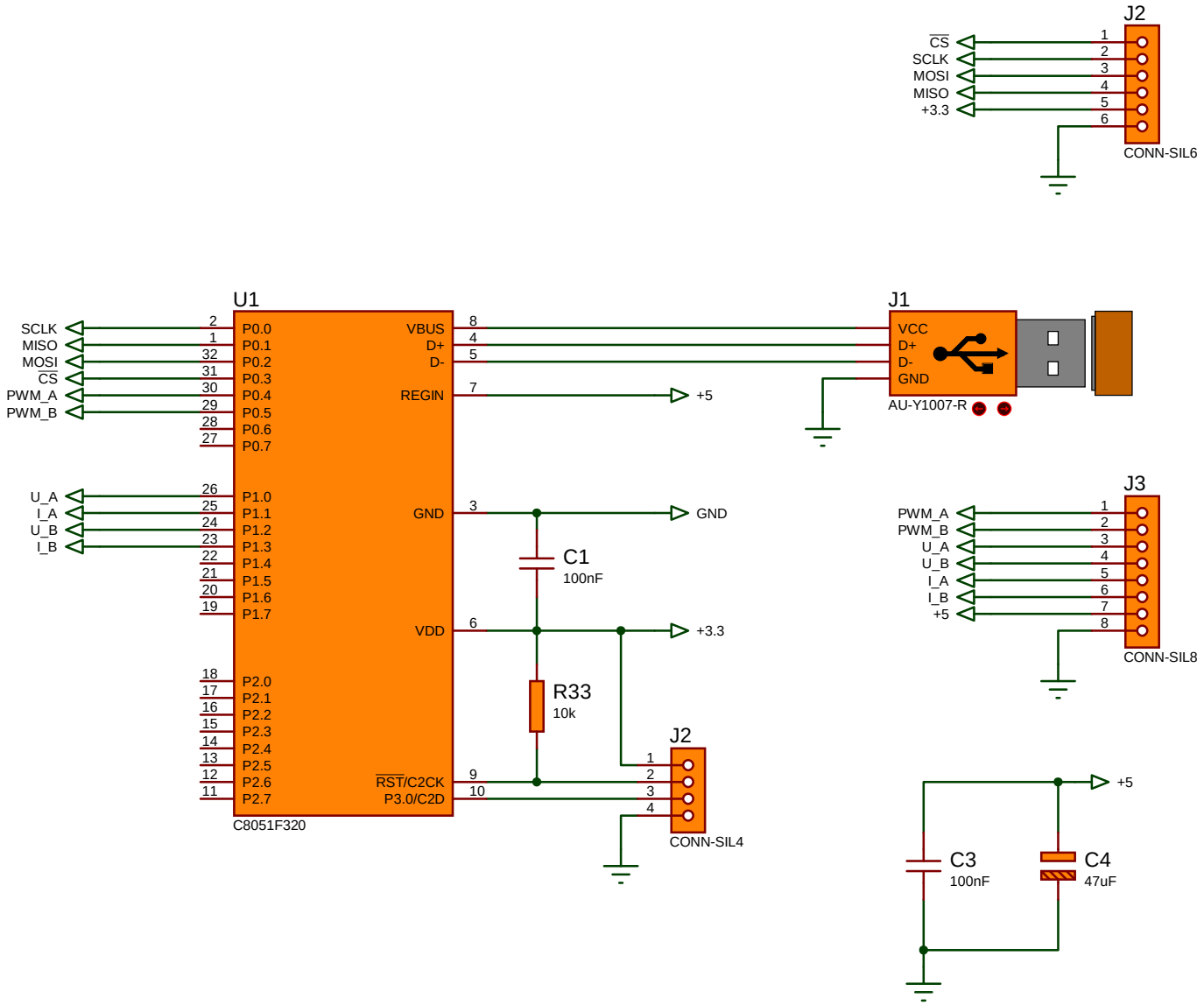
J2
CS
SCLK
MOSI
MISO
+3.3
1
2
3
4
5
6
CONN-SIL6
U1
SCLK
MISO
MOSI
CS
PWM_A
PWM_B
U_A
I_A
U_B
I_B
P0.0
P0.1
P0.2
P0.3
P0.4
P0.5
P0.6
P0.7
P1.0
P1.1
P1.2
P1.3
P1.4
P1.5
P1.6
P1.7
P2.0
P2.1
P2.2
P2.3
P2.4
P2.5
P2.6
P2.7
VBUS
D+
D-
REGIN
GND
VDD
RST/C2CK
P3.0/C2D
C8051F320
J1
VCC
D+
D-
GND
AU-Y1007-R
+5
GND
C1
100nF
+3.3
R33
10k
J2
CONN-SIL4
J3
PWM_A
PWM_B
U_A
U_B
I_A
I_B
+5
CONN-SIL8
C3
100nF
C4
47uF

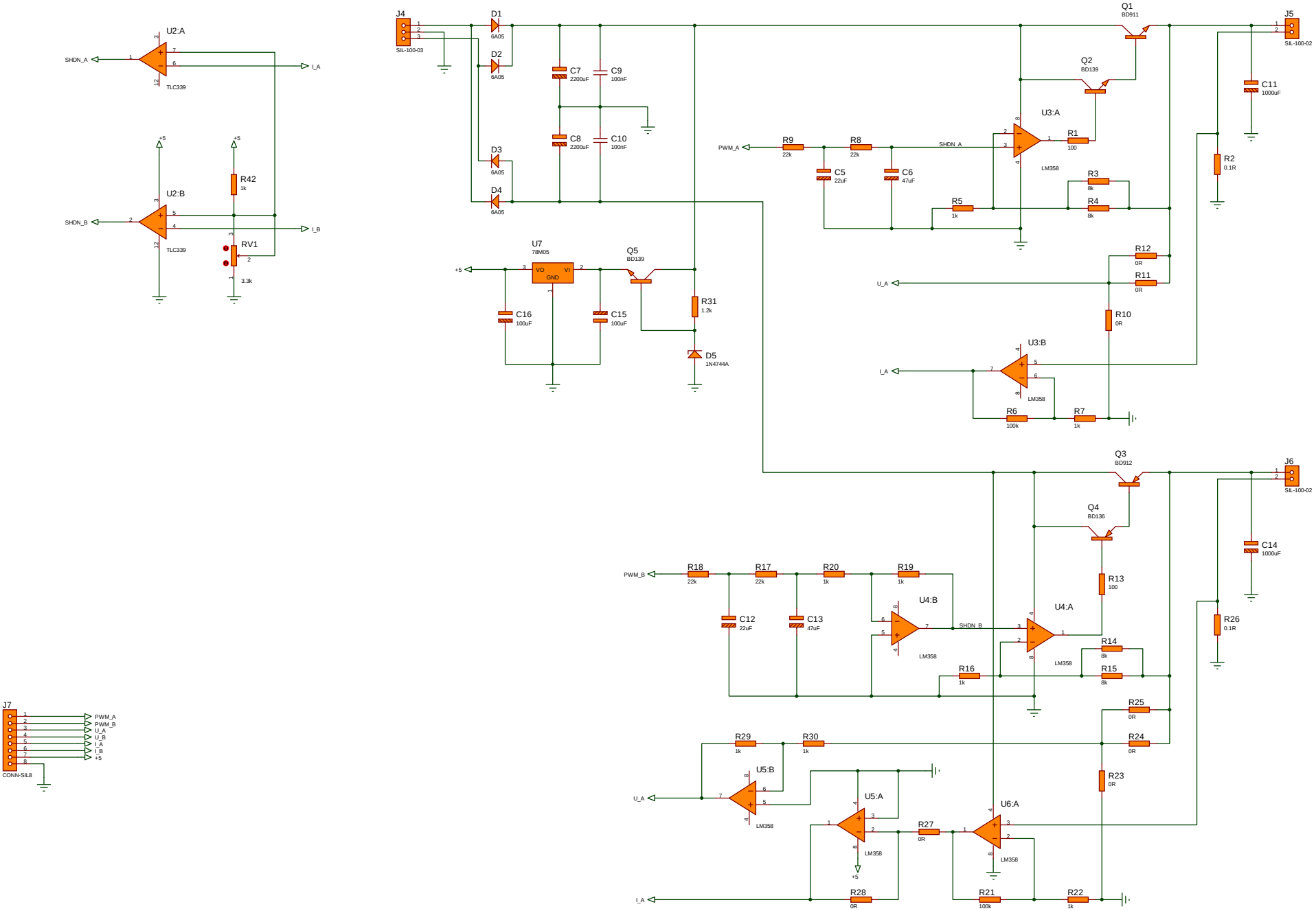
U2:A
SHDN_A
I_A
TLC339
U2:B
SHDN_B
I_B
TLC339
+5
R42
1k
RV1
3.3k
J4
SIL-100-03
D1
6A05
D2
6A05
D3
6A05
D4
6A05
C7
2200uF
C8
2200uF
C9
100nF
C10
100nF
U7
78M05
VO
VI
GND
C16
100uF
C15
100uF
Q5
BD139
R31
1.2k
D5
1N4744A
Q1
BD911
Q2
BD139
J5
SIL-100-02
C11
1000uF
R2
0.1R
PWM_A
R9
22k
R8
22k
C5
22uF
C6
47uF
SHDN_A
U3:A
LM358
R1
100
R3
8k
R4
8k
R5
1k
R12
0R
R11
0R
U_A
R10
0R
U3:B
LM358
I_A
R6
100k
R7
1k
Q3
BD912
Q4
BD136
J6
SIL-100-02
C14
1000uF
R26
0.1R
PWM_B
R18
22k
R17
22k
R20
1k
R19
1k
C12
22uF
C13
47uF
U4:B
LM358
SHDN_B
U4:A
LM358
R13
100
R14
8k
R15
8k
R16
1k
R25
0R
R24
0R
R23
0R
R29
1k
R30
1k
U5:B
LM358
U_A
U5:A
LM358
+5
R27
0R
U6:A
LM358
I_A
R28
0R
R21
100k
R22
1k
J7
CONN-SIL8
PWM_A
PWM_B
U_A
U_B
I_A
I_B
+5

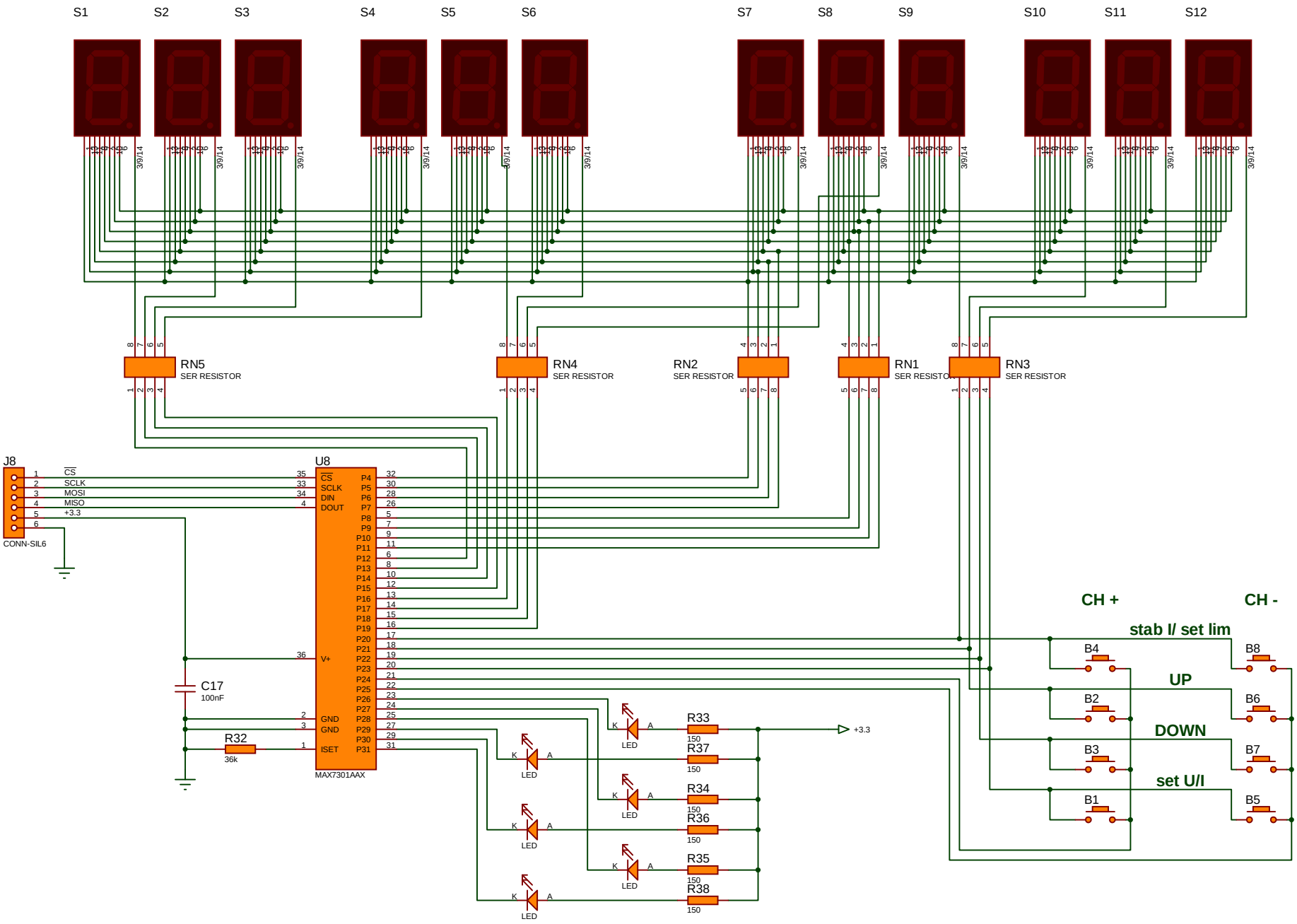
S1
S2
S3
S4
S5
S6
S7
S8
S9
S10
S11
S12
RN5
SER RESISTOR
RN4
SER RESISTOR
RN2
SER RESISTOR
RN1
SER RESISTOR
RN3
SER RESISTOR
J8
CONN-SIL6
CS
SCLK
MOSI
MISO
+3.3
U8
MAX7301AAX
V+
GND
GND
ISET
C17
100nF
R32
36k
R33
R37
R34
R36
R35
R38
150
LED
+3.3
CH +
CH -
stab I/ set lim
UP
DOWN
set U/I
B1
B2
B3
B4
B5
B6
B7
B8