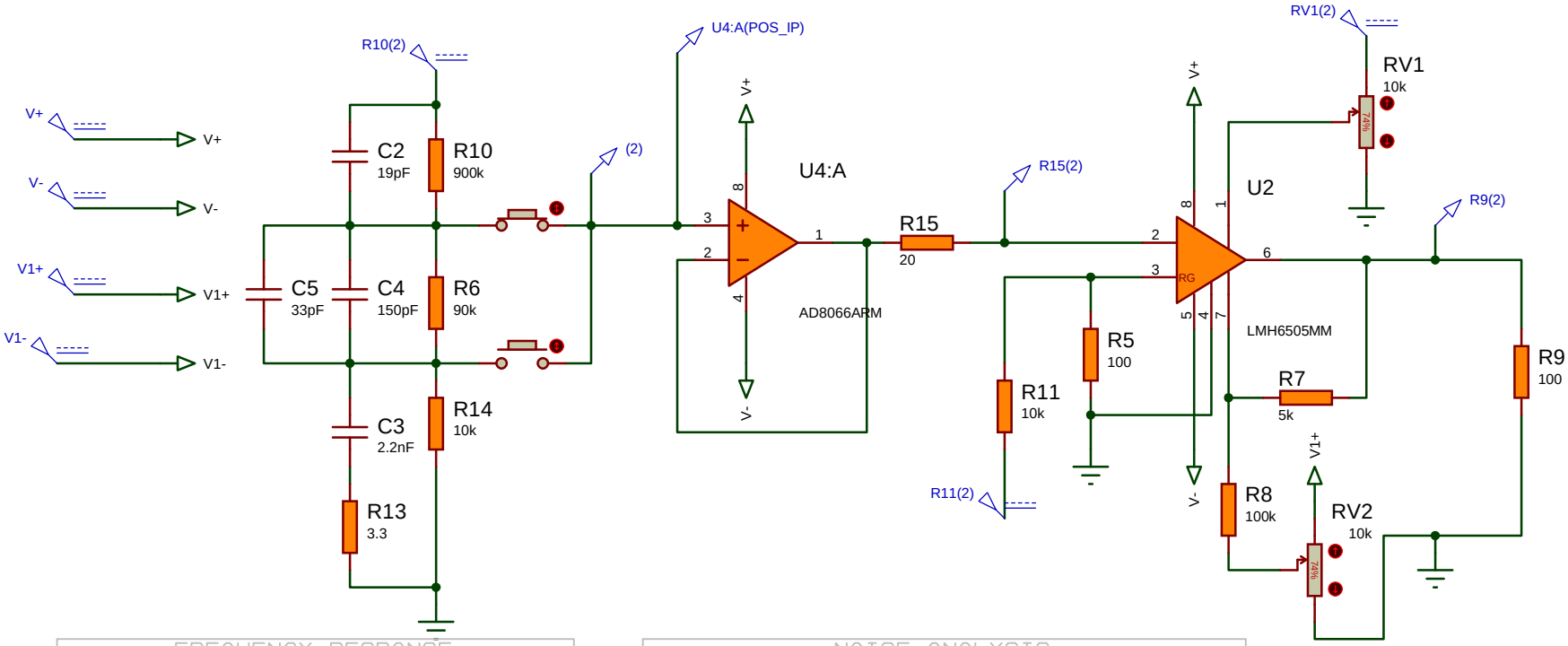
V+
V-
V1+
V1-
R10(2)
C2
19pF
R10
900k
C5
33pF
C4
150pF
R6
90k
C3
2.2nF
R14
10k
R13
3.3
(2)
U4:A(POS_IP)
U4:A
AD8066ARM
R15
20
R15(2)
R11
10k
R11(2)
R5
100
U2
LMH6505MM
RG
R7
5k
R8
100k
RV1(2)
RV1
10k
RV2
10k
R9(2)
R9
100

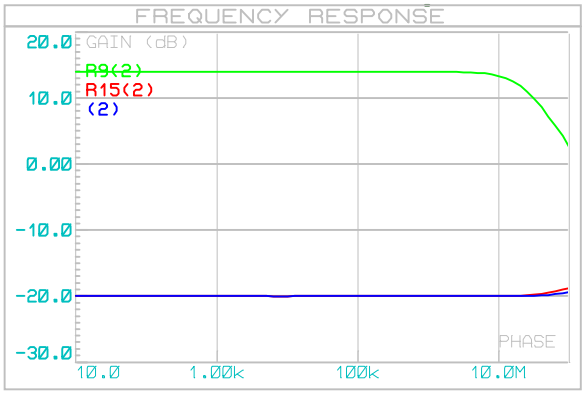
FREQUENCY RESPONSE
GAIN (dB)
R9(2)
R15(2)
(2)
PHASE
20.0
10.0
0.00
-10.0
-20.0
-30.0
10.0
1.00k
100k
10.0M

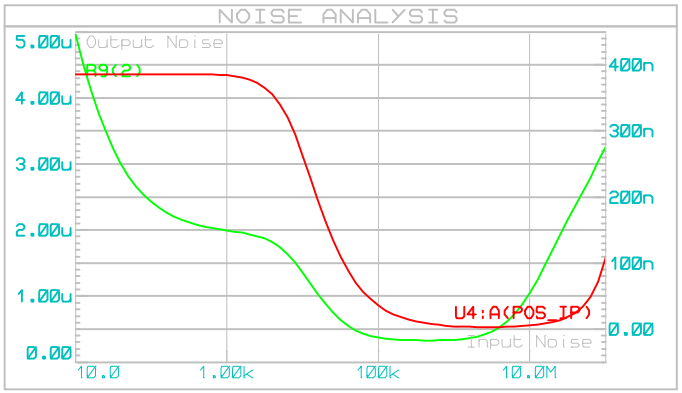
NOISE ANALYSIS
Output Noise
R9(2)
U4:A(POS_IP)
Input Noise
5.00u
4.00u
3.00u
2.00u
1.00u
0.00
400n
300n
200n
100n
0.00
10.0
1.00k
100k
10.0M

18.03.2011