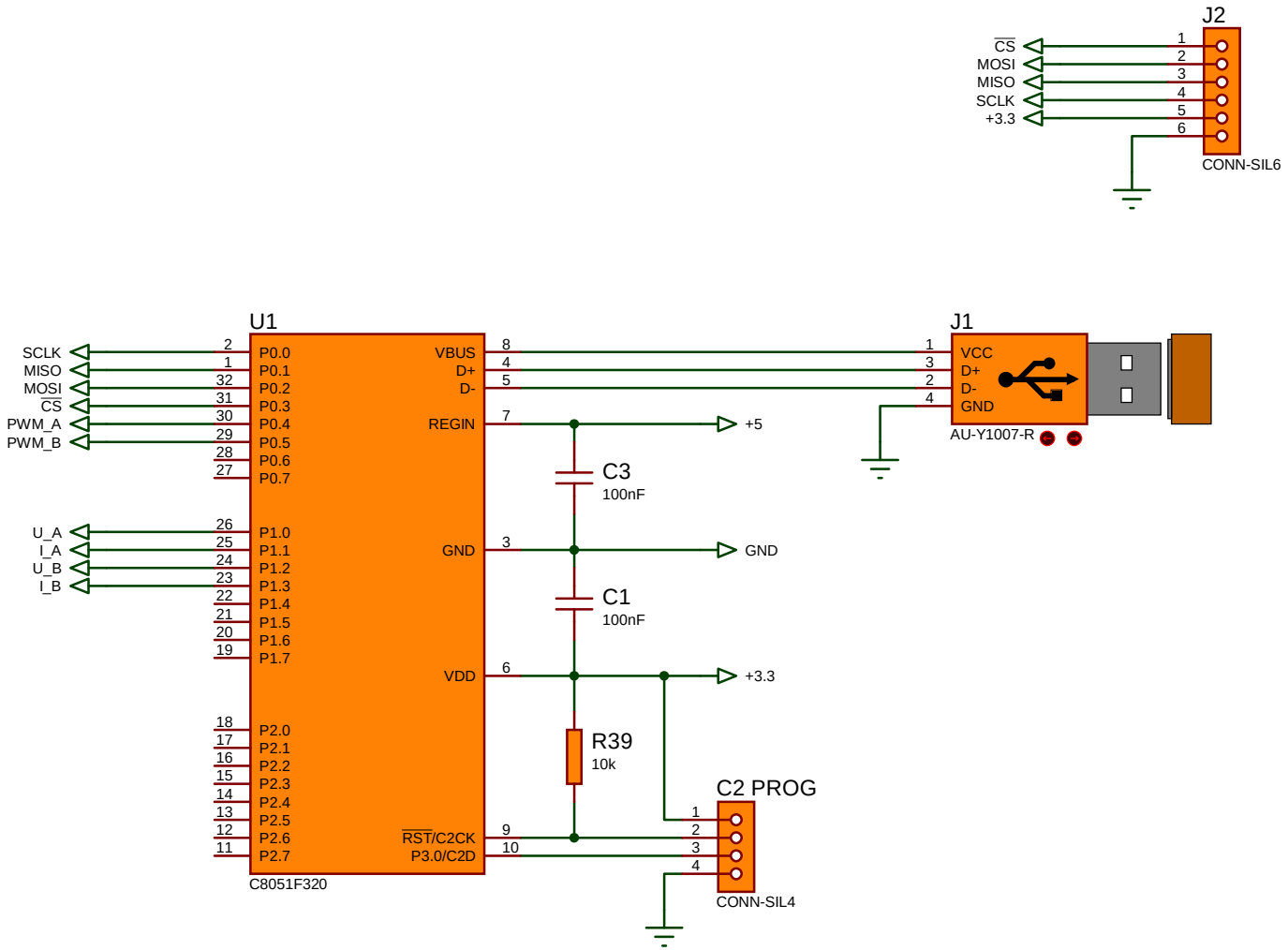
J2
CS
MOSI
MISO
SCLK
+3.3
1
2
3
4
5
6
CONN-SIL6
U1
SCLK
MISO
MOSI
CS
PWM_A
PWM_B
U_A
I_A
U_B
I_B
P0.0
P0.1
P0.2
P0.3
P0.4
P0.5
P0.6
P0.7
P1.0
P1.1
P1.2
P1.3
P1.4
P1.5
P1.6
P1.7
P2.0
P2.1
P2.2
P2.3
P2.4
P2.5
P2.6
P2.7
VBUS
D+
D-
REGIN
GND
VDD
RST/C2CK
P3.0/C2D
C8051F320
J1
VCC
D+
D-
GND
AU-Y1007-R
+5
C3
100nF
GND
C1
100nF
+3.3
R39
10k
C2 PROG
CONN-SIL4

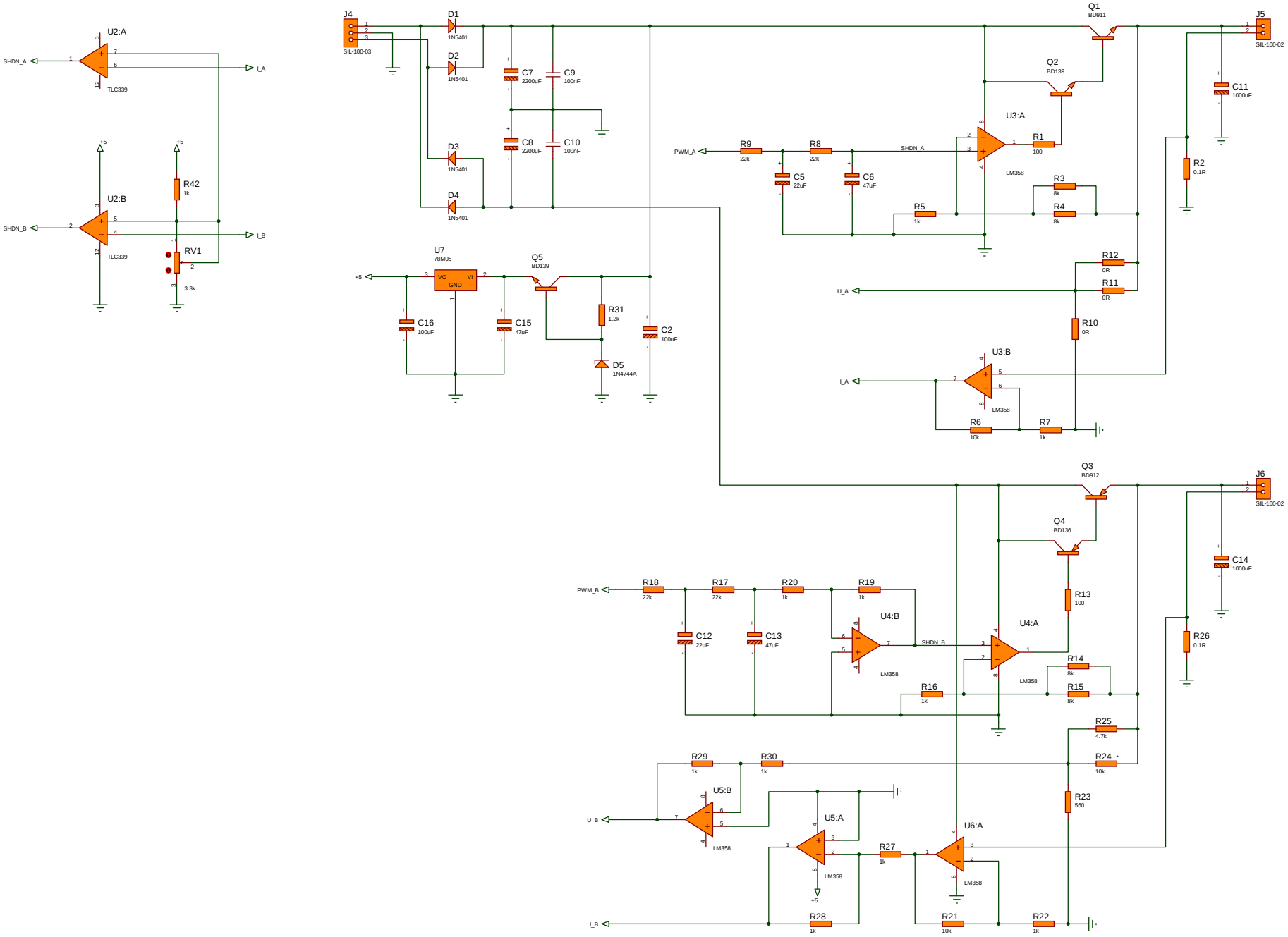
U2:A
SHDN_A
I_A
TLC339
U2:B
SHDN_B
I_B
TLC339
+5
R42
1k
RV1
3.3k
J4
SIL-100-03
D1
1N5401
D2
1N5401
D3
1N5401
D4
1N5401
C7
2200uF
C9
100nF
C8
2200uF
C10
100nF
U7
78M05
VO
GND
VI
C16
100uF
C15
47uF
Q5
BD139
R31
1.2k
D5
1N4744A
C2
100uF
Q1
BD911
Q2
BD139
J5
SIL-100-02
C11
1000uF
R2
0.1R
U3:A
LM358
PWM_A
R9
22k
R8
22k
SHDN_A
C5
22uF
C6
47uF
R1
100
R3
8k
R4
8k
R5
1k
R12
0R
R11
0R
U_A
R10
0R
U3:B
LM358
I_A
R6
10k
R7
1k
Q3
BD912
Q4
BD136
J6
SIL-100-02
C14
1000uF
R26
0.1R
PWM_B
R18
22k
R17
22k
R20
1k
R19
1k
C12
22uF
C13
47uF
U4:B
LM358
SHDN_B
U4:A
LM358
R13
100
R14
8k
R15
8k
R16
1k
R25
4.7k
R24
10k
R29
1k
R30
1k
U5:B
LM358
U_B
U5:A
LM358
+5
R27
1k
U6:A
LM358
R23
560
I_B
R28
1k
R21
10k
R22
1k