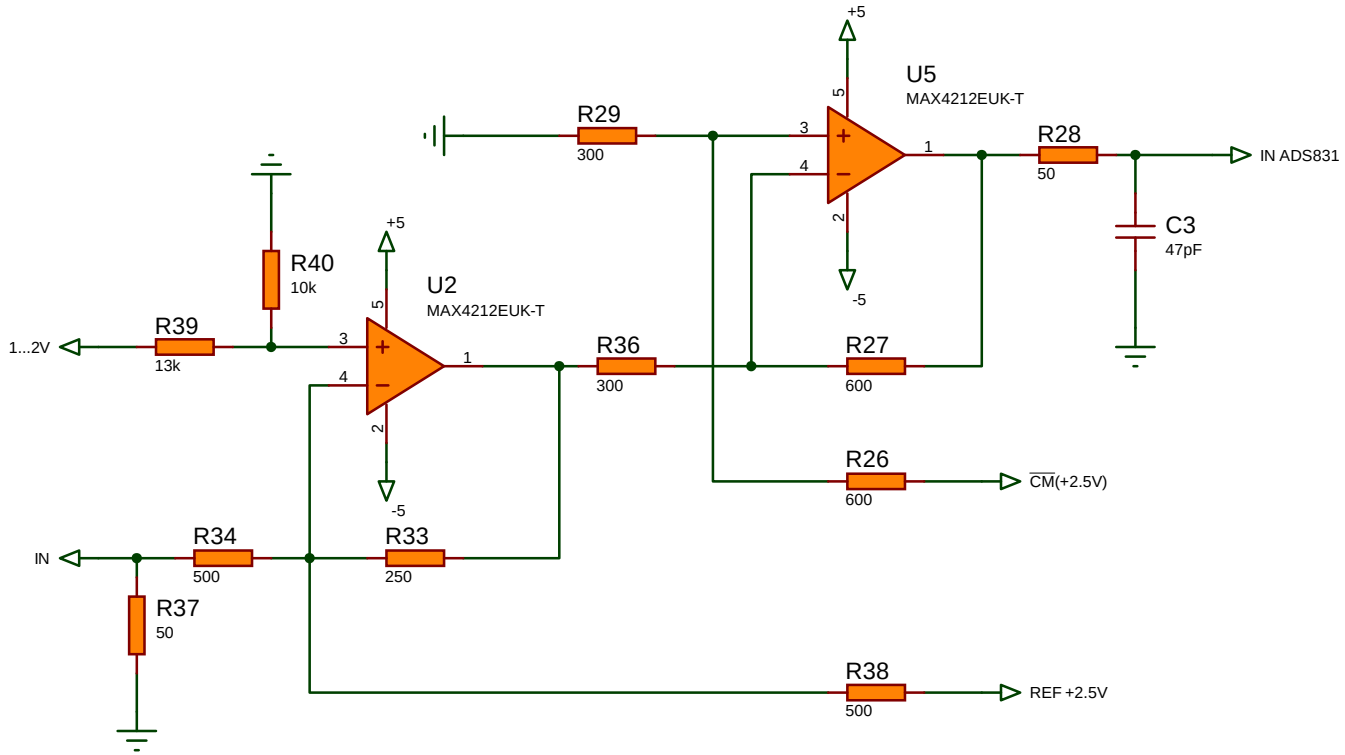
+5
U5
MAX4212EUK-T
R29
300
R28
50
IN ADS831
C3
47pF
-5
R40
10k
+5
U2
MAX4212EUK-T
1...2V
R39
13k
R36
300
R27
600
R26
600
CM(+2.5V)
-5
IN
R34
500
R33
250
R37
50
R38
500
REF +2.5V